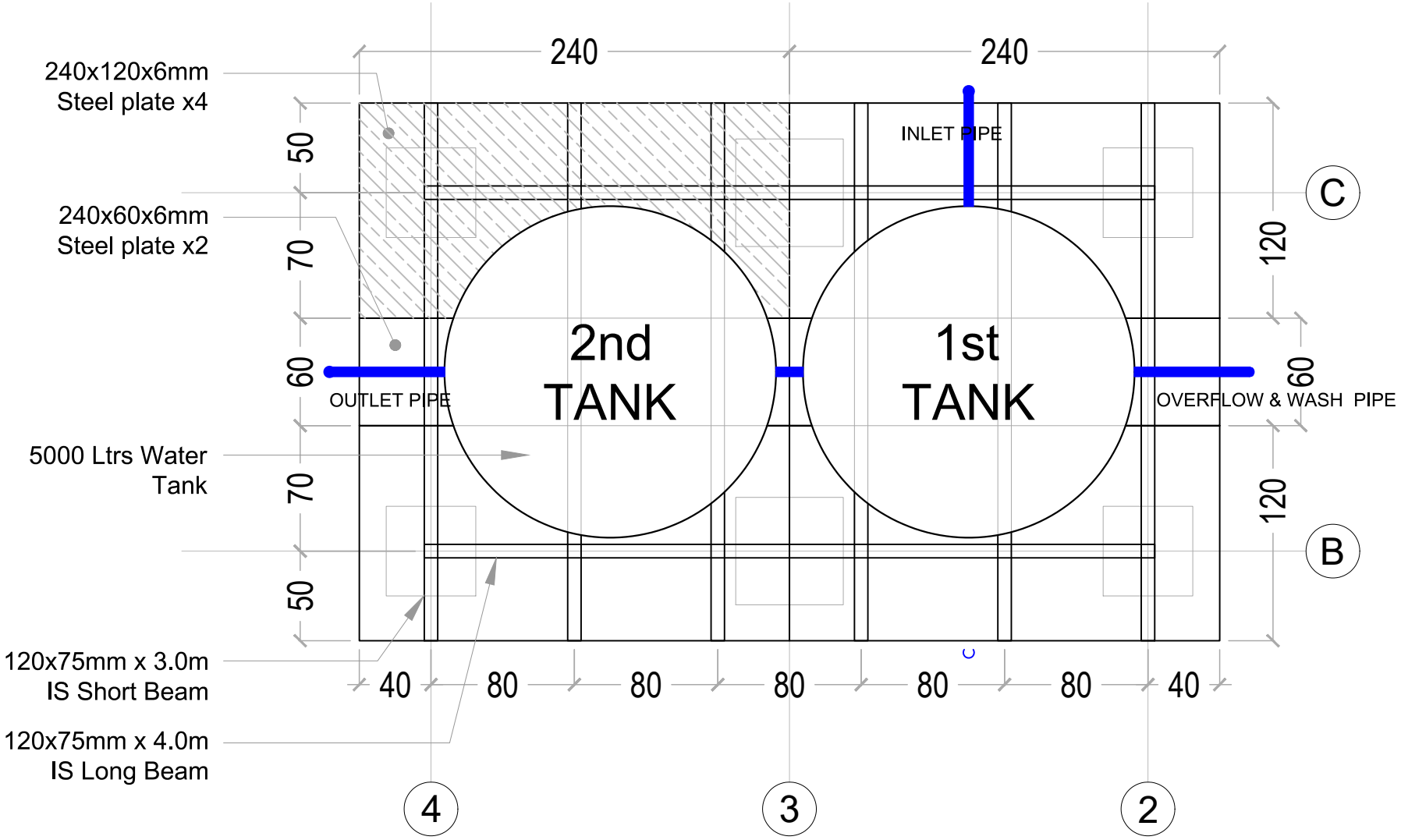

Designed by
Tako Wesley NCA WASH Coordinator

Donor Logo

NORWEGIAN CHURCH AID
actalliance

Legend

TITLE	
TANK PLAN	
SCALE	SHEET NUMBER
1:100	G300
PLOT DATE	
15.10.2015	
FILE NAME	
NCA - WASH PROGRAM	

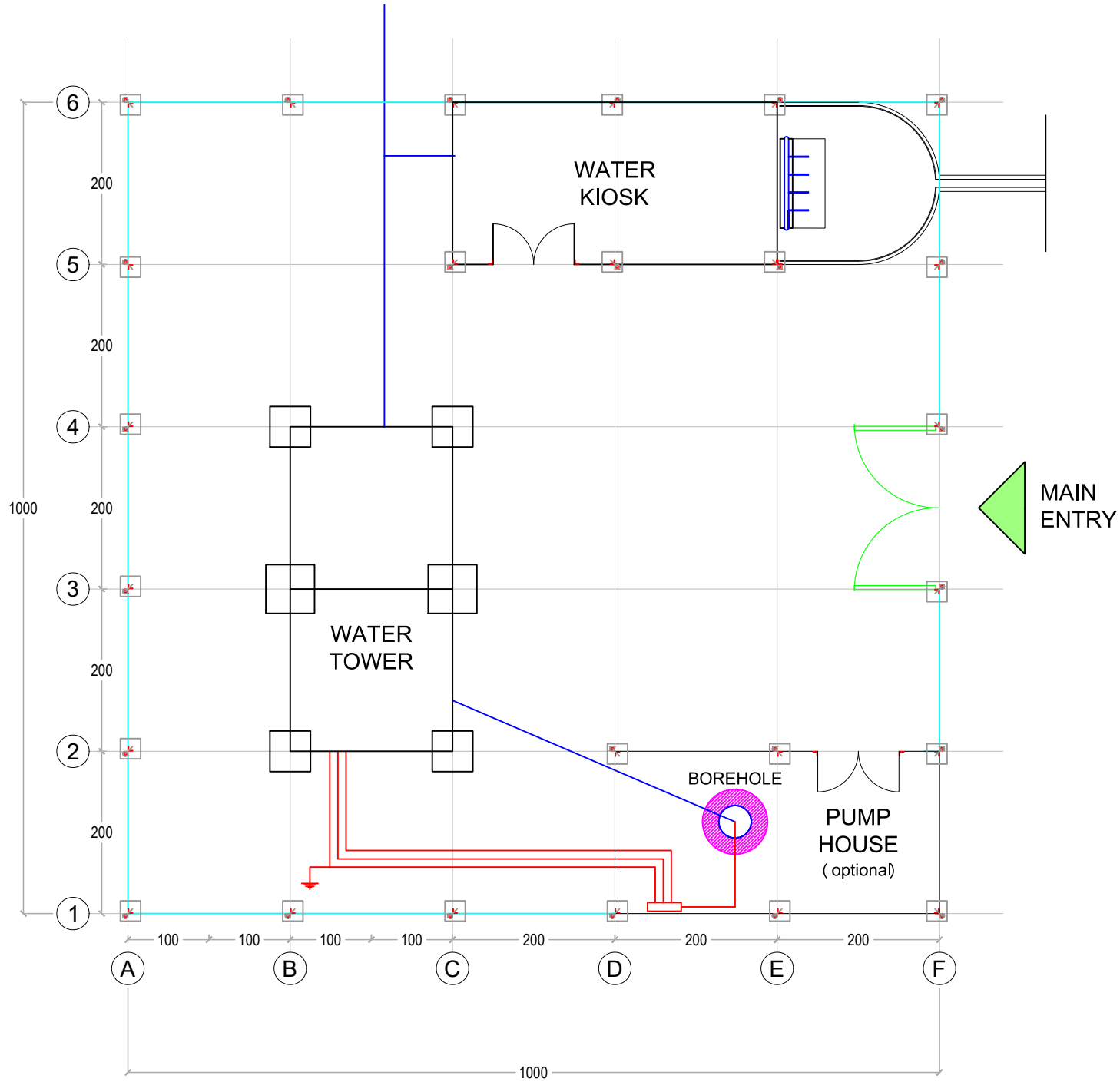

Designed by
NCA WASH Coordinator: Tako Wesley

Donor Logo

NORWEGIAN CHURCH AID
actalliance

Legend

TITLE	
ELEVATIONS	
SCALE	SHEET NUMBER
1:100	G200
PLOT DATE	
15.06.2020	
FILE NAME	
Water Yard Fence	

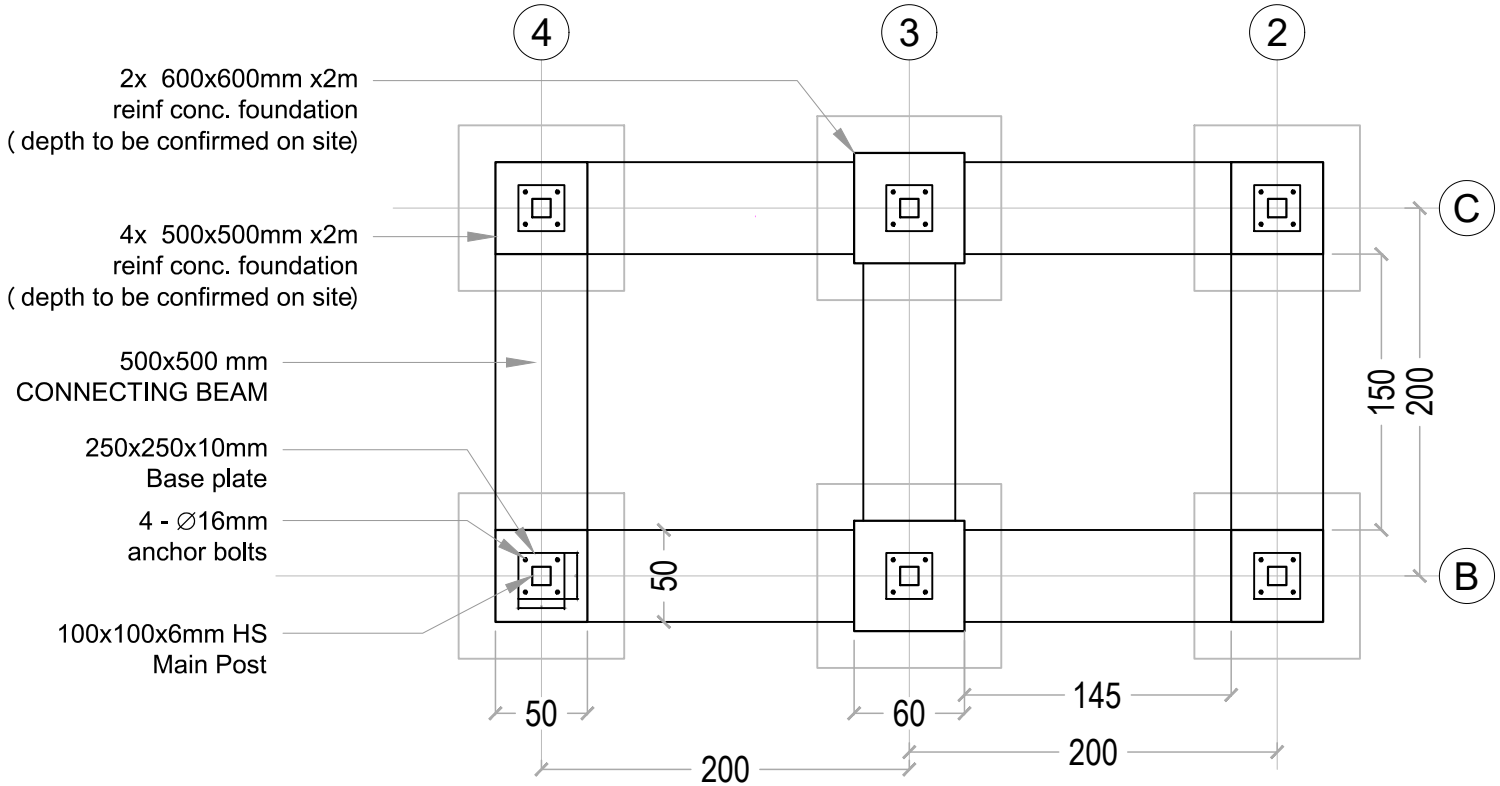

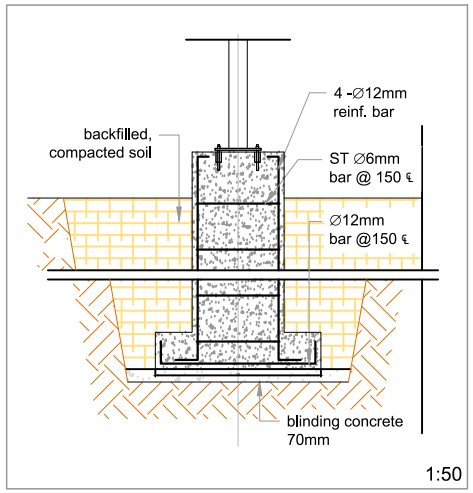

FOUNDATION
DETAILS

NTS

FOUNDATION
PERSPECTIVE VIEW

NTS

FOUNDATION
REINFORCEMENT DETAILS

Designed by

NCA WASH Coordinator: Tako Wesley

Donor Logo

NORWEGIAN CHURCH AID
actalliance

Legend

TITLE	
SECTION R - R	
SCALE	SHEET NUMBER
1:100	G300
PLOT DATE	
15.10.2015	
FILE NAME	

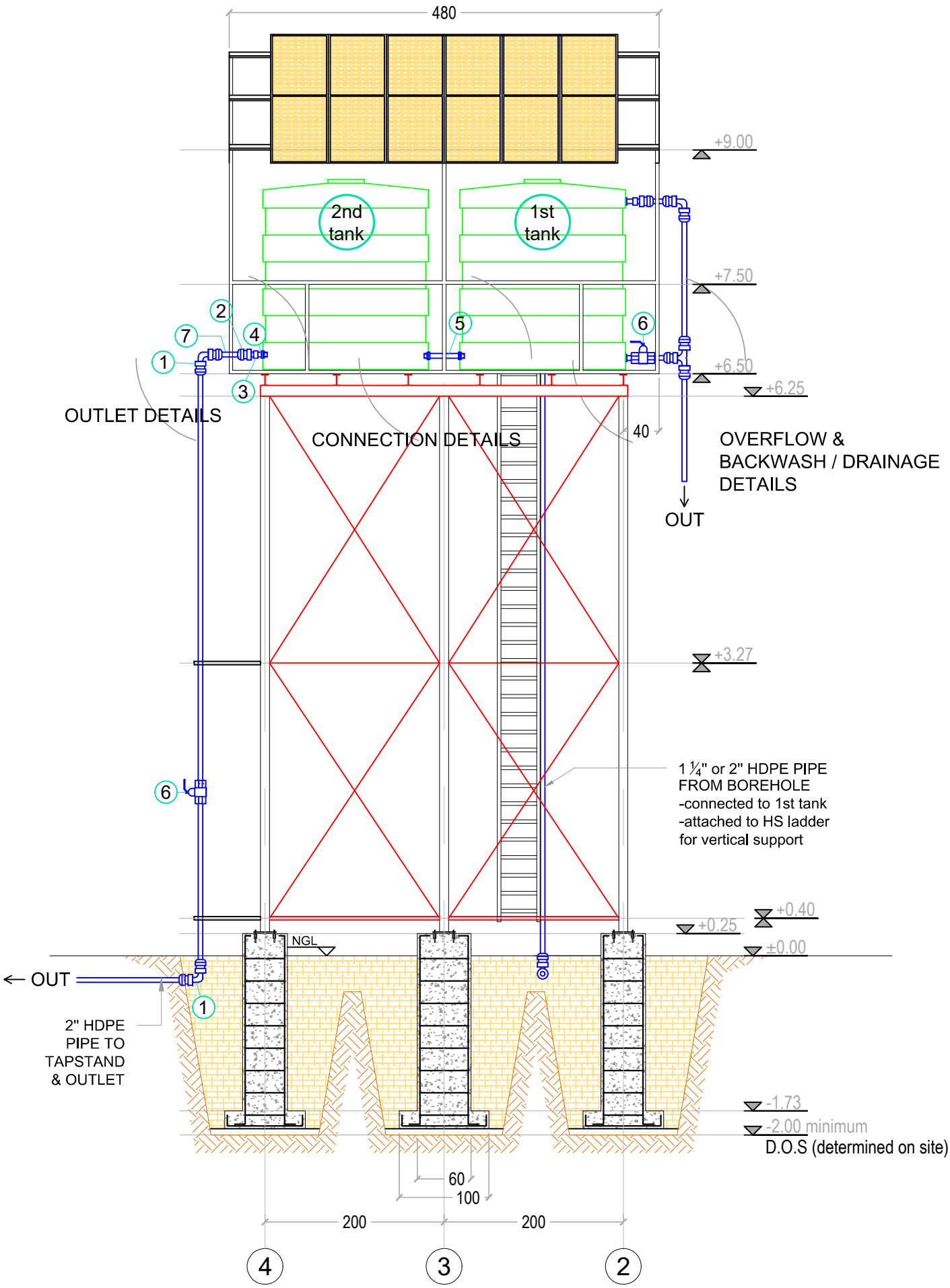
480
+9.00
2nd tank
1st tank
+7.50
+6.50
+6.25
OUTLET DETAILS
CONNECTION DETAILS
40
OVERFLOW & BACKWASH / DRAINAGE DETAILS
OUT
+3.27
1 ¼" or 2" HDPE PIPE FROM BOREHOLE
-connected to 1st tank
-attached to HS ladder for vertical support
+0.40
+0.25
±0.00
NGL
← OUT
2" HDPE PIPE TO TAPSTAND & OUTLET
-1.73
-2.00 minimum
D.O.S (determined on site)
60
100
200
200
4
3
2

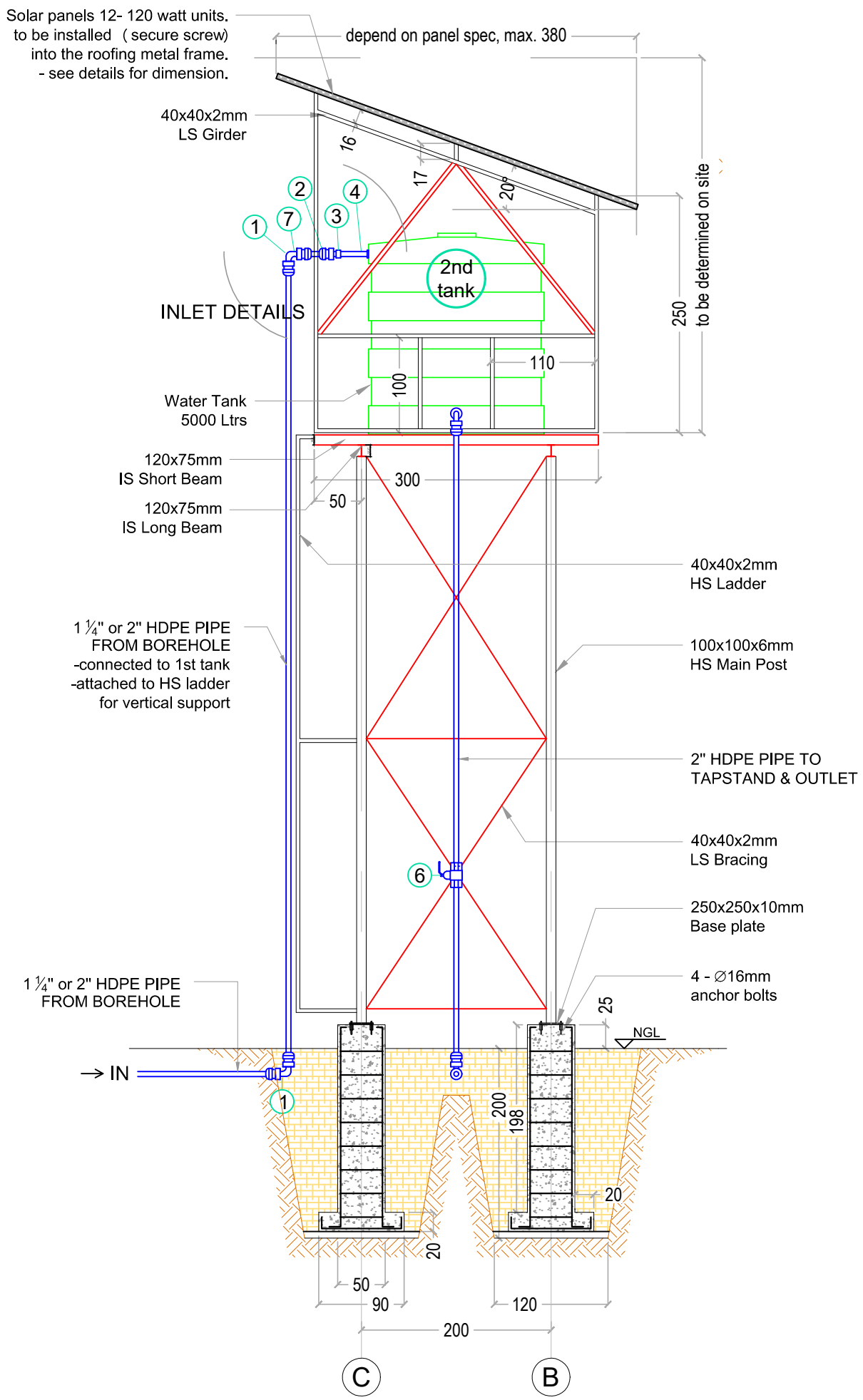
Solar panels 12- 120 watt units.
to be installed (secure screw)
into the roofing metal frame.
- see details for dimension.
depend on panel spec, max. 380
40x40x2mm
LS Girder
16
17
20°
2nd
tank
INLET DETAILS
250
to be determined on site
110
100
Water Tank
5000 Ltrs
120x75mm
IS Short Beam
300
50
120x75mm
IS Long Beam
40x40x2mm
HS Ladder
1 ¼" or 2" HDPE PIPE
FROM BOREHOLE
-connected to 1st tank
-attached to HS ladder
for vertical support
100x100x6mm
HS Main Post
2" HDPE PIPE TO
TAPSTAND & OUTLET
40x40x2mm
LS Bracing
250x250x10mm
Base plate
4 - ∅16mm
anchor bolts
1 ¼" or 2" HDPE PIPE
FROM BOREHOLE
25
NGL
→ IN
200
198
20
20
50
90
120
200
C
B

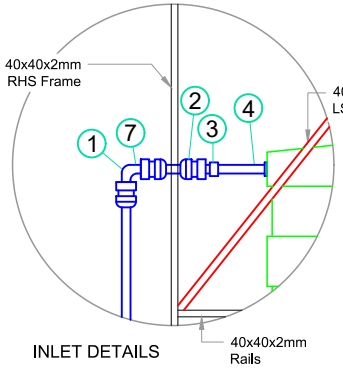

INLET DETAILS

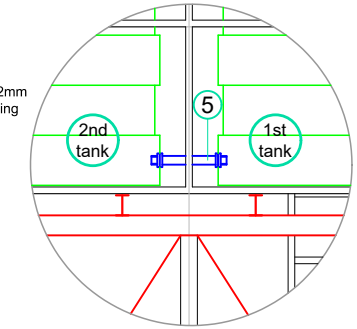

CONNECTION DETAILS

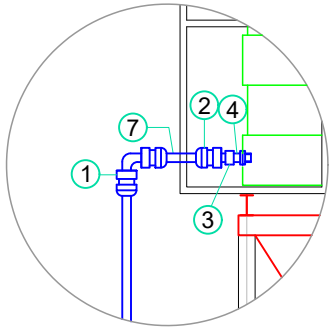

OUTLET DETAILS

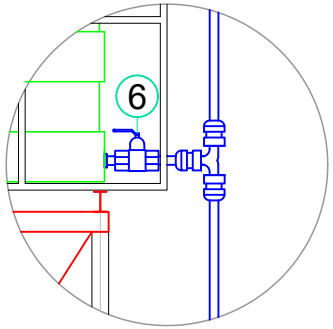

OVERFLOW & BACKWASH DETAILS

INDEX

1. Coupling HDPE, Specified dia., Elbow 90 deg., Compression
2. Coupling HDPE, Specified dia., Adaptor HDPE-GI, Compression-Male
3. Socket, GI, Specified dia., Female-Female
4. Long Screw, GI, Specified dia., Male-Male c/w 2 bush nuts to seal tank
5. Pipe, GI, 2", Threaded Male-Male c/w 4 bush nuts to seal tank
6. Ball Valve, GI, 2"
7. HDPE pipe, Specified dia.

LEFT END ELEVATION

Designed by
NCA WASH Coordinator: Tako Wesley

Donor Logo

NORWEGIAN CHURCH AID
actalliance

Legend

TITLE	
END ELEVATIONS	
SCALE	SHEET NUMBER
1:100	G400
PLOT DATE	
15.06.2020	
FILE NAME	
Pipe Connection Details	

BOREHOLE CONNECTION

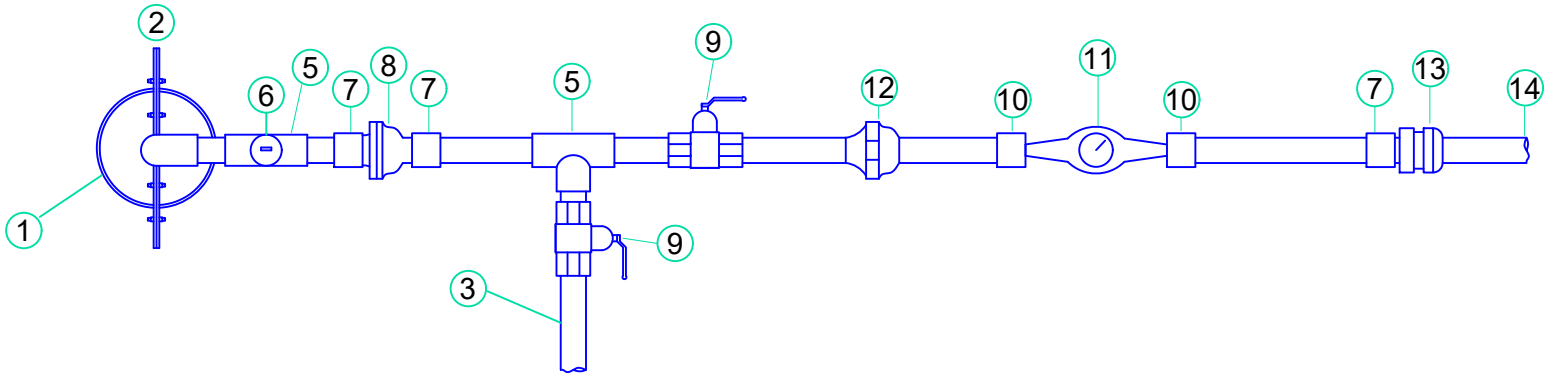

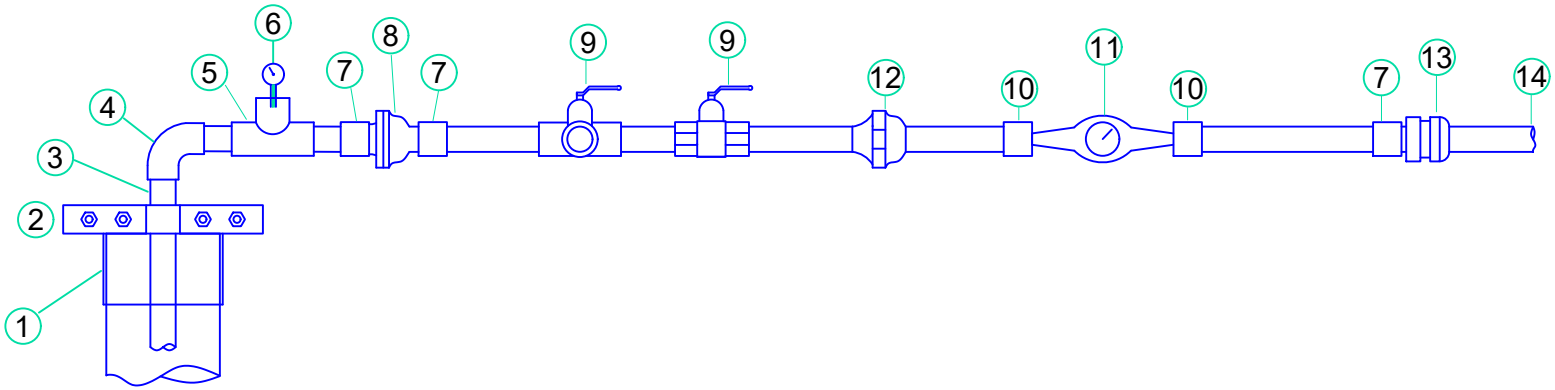

INDEX

1. Borehole Cover
2. Pipe Clamp 1 ¼"
3. GI Pipe 1 ¼"
4. Elbow 90 deg. GI, 1 ¼" (long radius preferred)
5. Coupling, Tee, GI, 1 ¼ "
6. Pressure Gauge, with diameter adaptor, 0-20 bar, glycerine
7. Coupling, Socket, GI, 1 ¼"
8. Non-Return Valve, 1 1/4", M-M
9. Ball Valve, 1 1/4", F-F
10. Adaptor, 1 1/4"-1", F-F
11. Flowmeter, 1", Categ.B Horizontal, M-M
12. Union, GI, 1 1/4", F-F
13. GI-HDPE Adaptor, 1 1/4", M-F
14. HDPE Pipe, 1 1/4"

** M = Male, F = Female*

GROUND PLAN

Designed by
NCA WASH Coordinator: Tako Wesley

Donor Logo

NORWEGIAN CHURCH AID
actalliance

Legend

TITLE	
Elevated Water Tank	
SCALE	SHEET NUMBER
1:100	EWT100
PLOT DATE	
15.06.2020	
FILE NAME	
Pipe Connection Details	

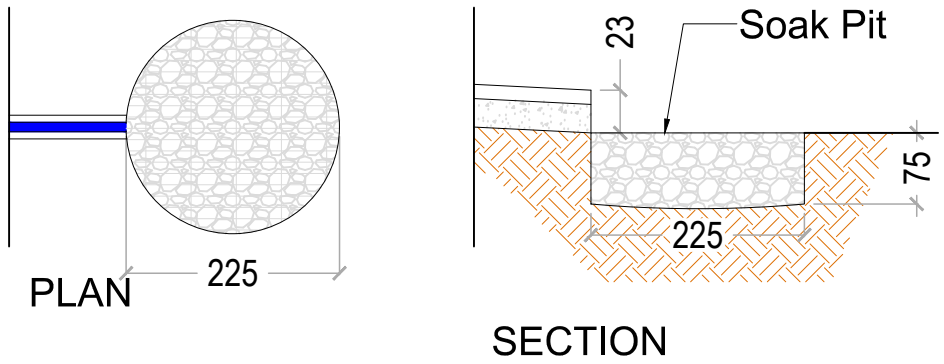

- OPTION 2 : LIVESTOCK TROUGH

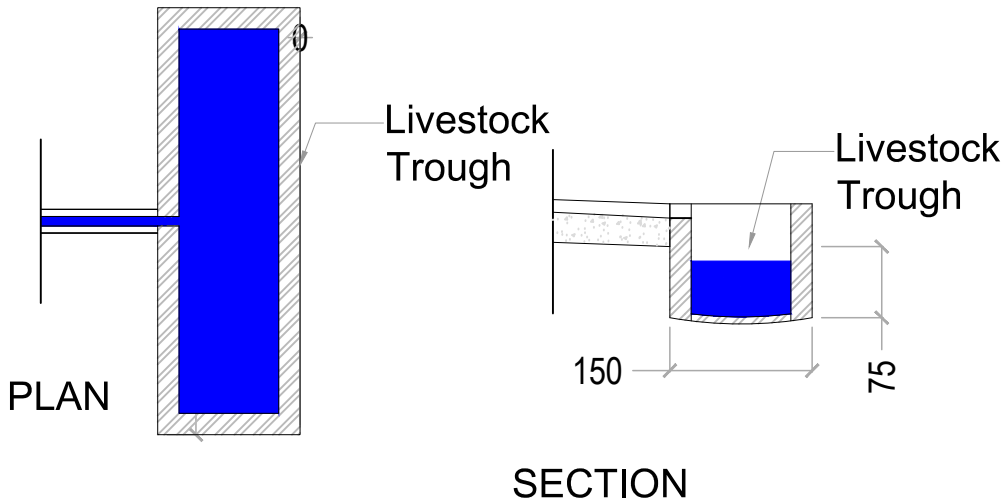

Designed by

Tako Wesley

Donor Logo

NORWEGIAN CHURCH AID
actalliance

Legend

TITLE	
Soakpit and Trough	
SCALE	SHEET NUMBER
1:100	G200
PLOT DATE	
15.10.2015	
FILE NAME	
Plan and Section	

OUTFLOW OPTIONS

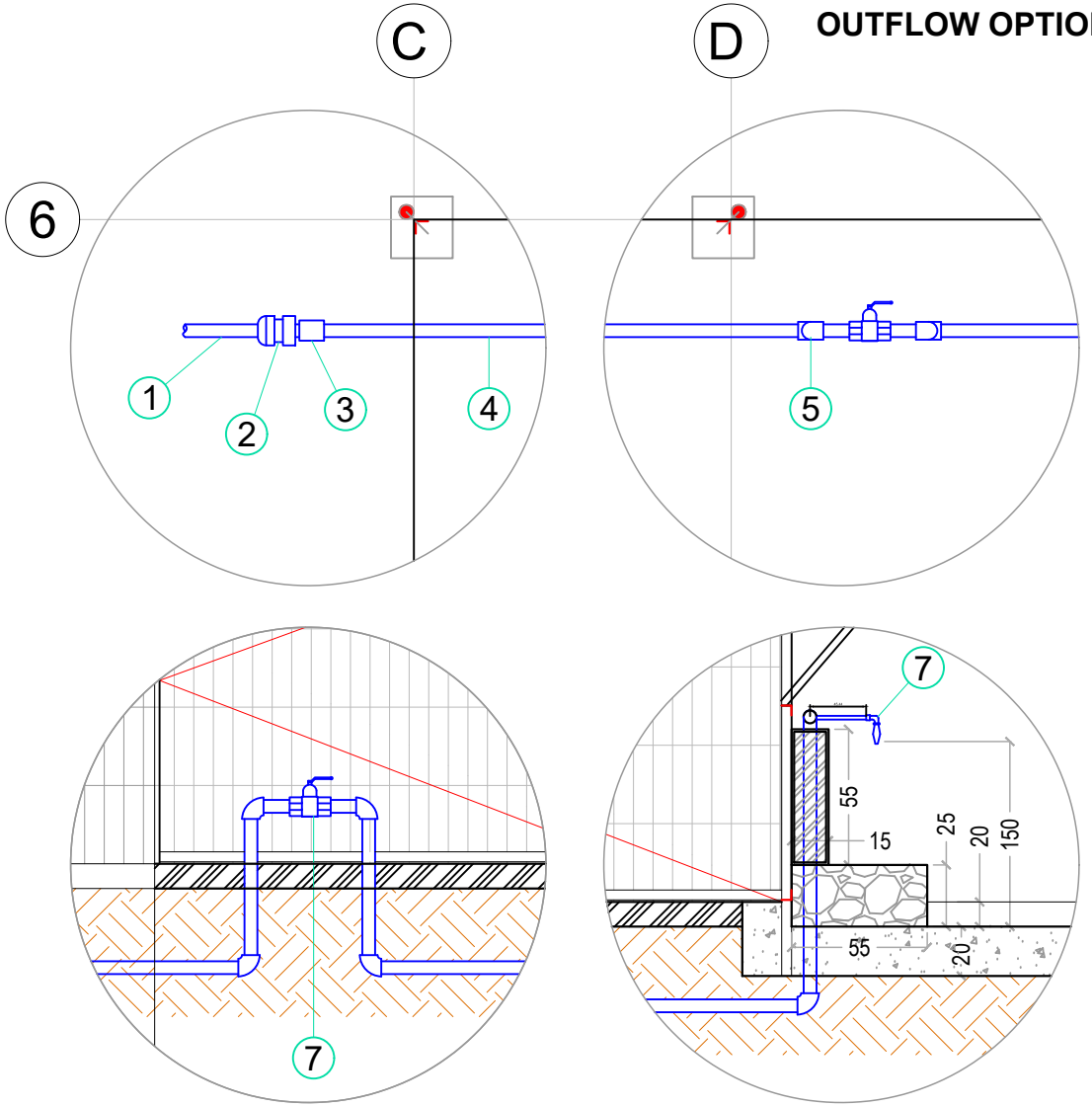

INDEX
1. HDPE Pipe 2"
2. Coupling HDPE, Specified dia., Adaptor HDPE-GI, Compression-Male
3. GI Socket, 2", Female-Female
4. GI Pipe, 2"
5. Elbow 90°, GI, 2"
6. Ball Valve, GI, 2"
7. Talbott Tap

WATER KIOSK (CL

Designed by
Tako Wesley

Donor Logo

NORWEGIAN CHURCH AID
actalliance

Legend

TITLE	
TAPSTAND	
SCALE	SHEET NUMBER
1:100	G100
PLOT DATE	
15.06.2020	
FILE NAME	
Tap Stand Details - Section	

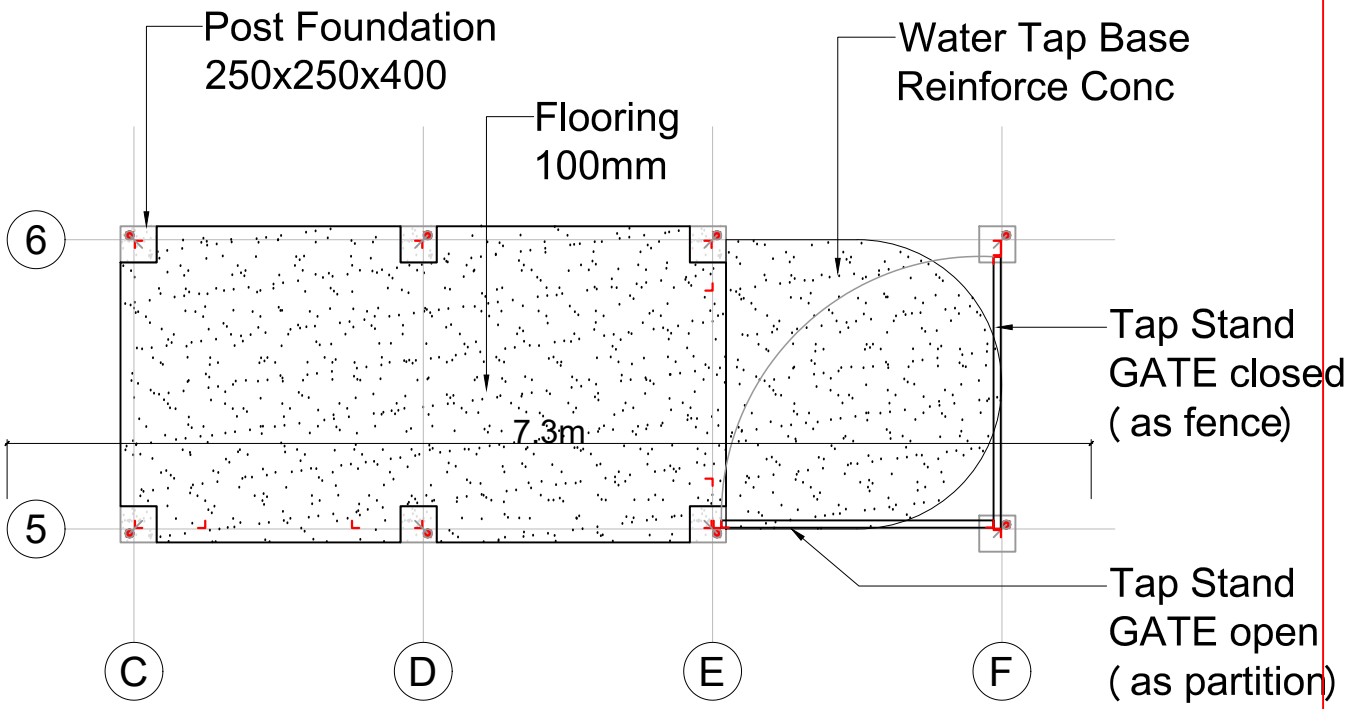

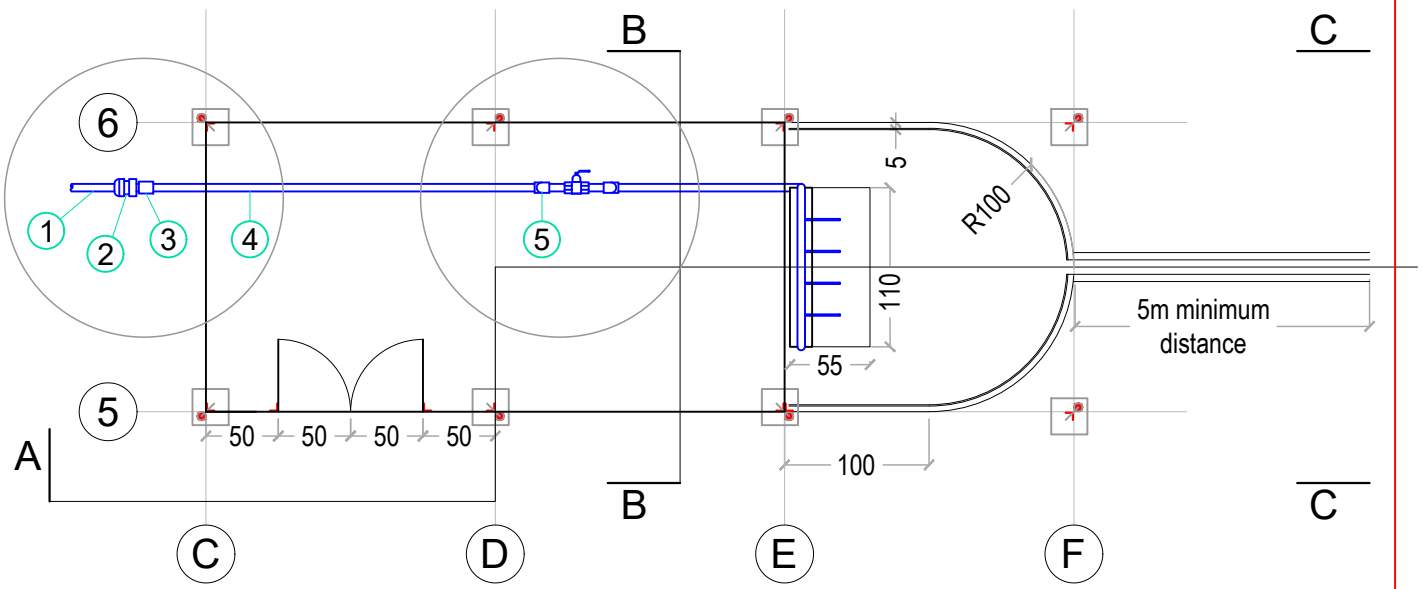

SEE OUTFLOW OPTIONS

Designed by
NCA WASH Coordinator: Tako Wesley

Donor Logo

NORWEGIAN CHURCH AID
actalliance

Legend

TITLE	
ROOF PLAN	
SCALE	SHEET NUMBER
1:100	R500
PLOT DATE	
15.06.2020	
FILE NAME	
Water Kiosk and Tap stand Details	

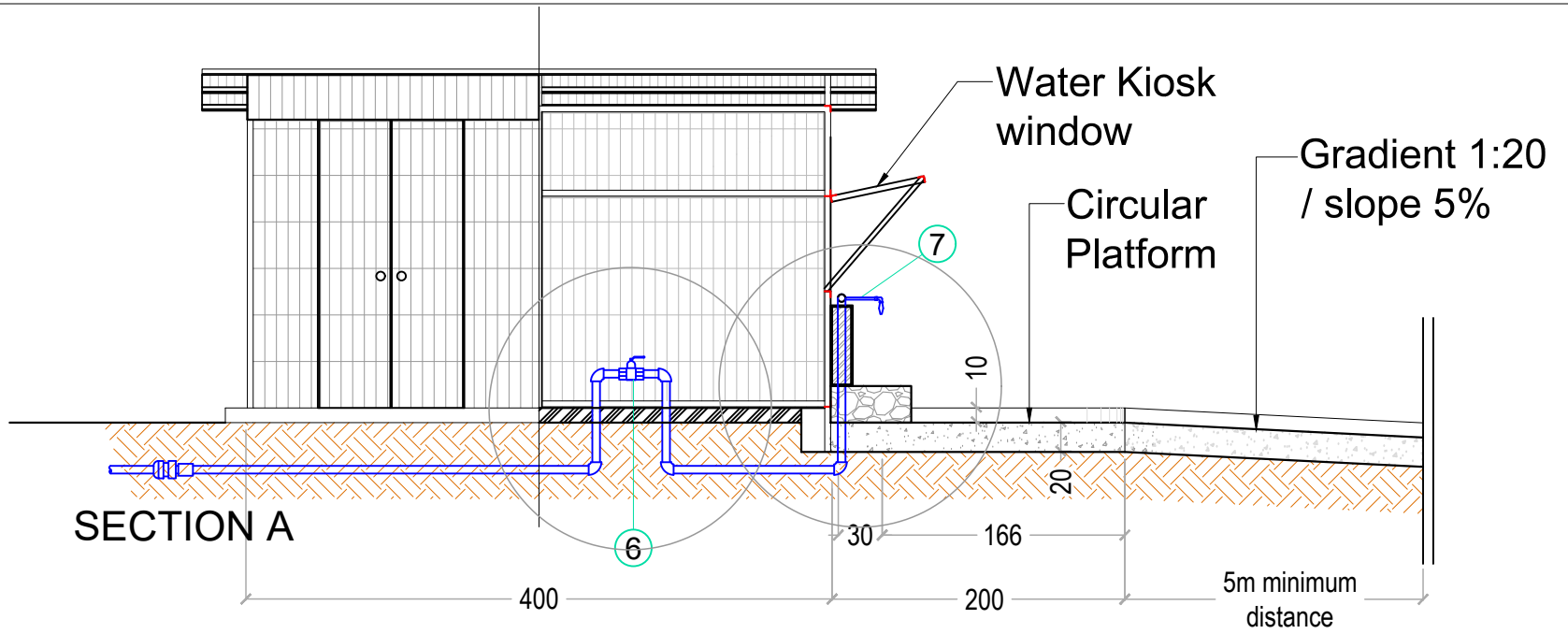

SECTION A

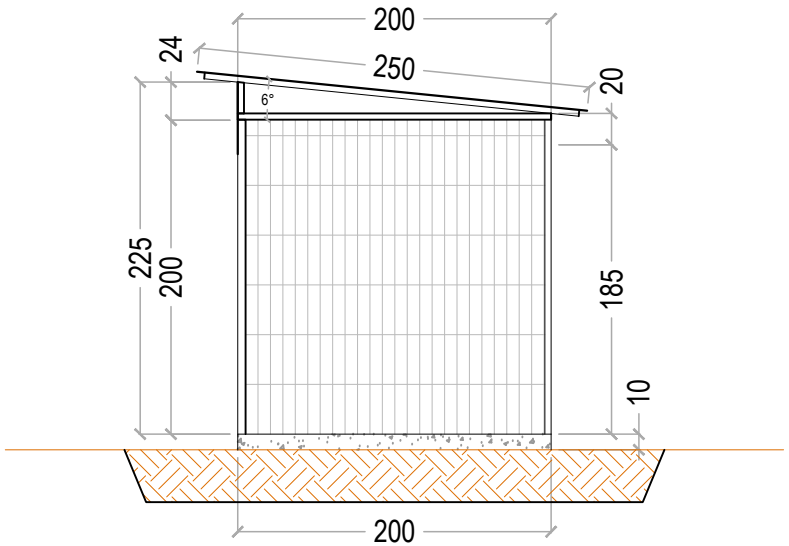

SECTION B

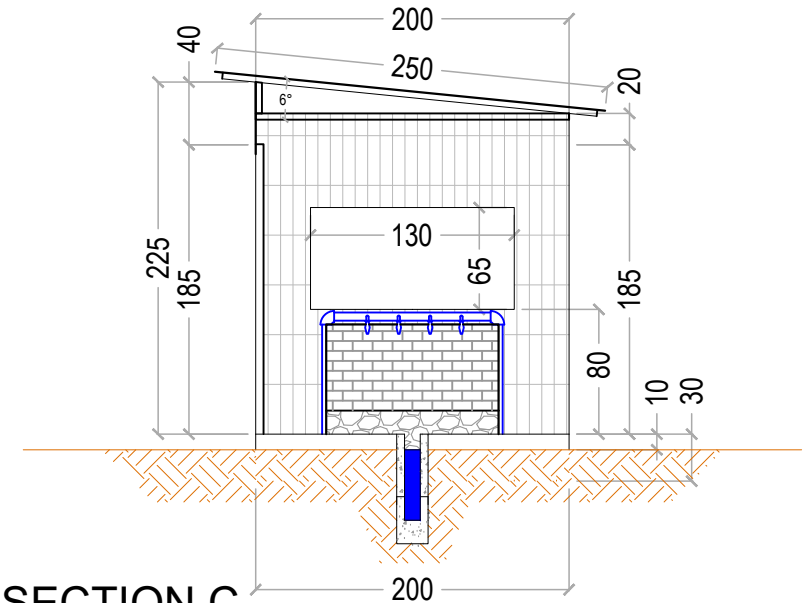

SECTION C

A

3.71m

GROUND PLAN

Designed by
NCA WASH Coordinator: Tako Wesley

Donor Logo

NORWEGIAN CHURCH AID
actalliance

Legend

TITLE	
Elevated Water Tank	
SCALE	SHEET NUMBER
1:100	EWT100
PLOT DATE	
15.10.2015	
FILE NAME	
Water Kiosk Elevations	